Effect of Different Nonconductive Substrate Materials on a P-Shaped Wearable Antenna

[1]Rajasree Hazra, [2]Chandan Kumar Ghosh, and [3]S.K.Parui
[1,2]Dr.B.C. Roy Engineering College, Durgapur, India
[3]Department of Electronics and Telecommunication Engineering,
Bengal Engineering and Science University(BESU), Shibpur,
Howrah-711103, India.
[1]E-mail:rajasreehazra@gmail.com

Abstract-This paper represents the effect of using different nonconductive substrate materials on a P shaped wearable antenna. This P shaped wearable antenna is designed to be used for Body Centric Wireless Communication (BCWC) at 2.45 GHz. Four types of nonconductive materials were selected i.e. glass, marble, polyethylene, rubber. These four types of nonconductive materials are compared with duroid (tm) substrate. The results demonstrated a good agreement between simulated return losses of all four substrates used for wearable antenna. The polyethylene based wearable antenna offered higher return loss compared to other substrate based antenna. The simulated return loss characteristics for all four types of substrates agreed reasonably well with this P shaped wearable antenna. Numerical study has been carried out by using Ansoft HFSS V13 simulating software.
.

Keywords- Wearable antenna, substrate materials, body centric wireless communication, return loss.

Manuscript received on 31 July 2013 and accepted for publication on 26 August 2013.

1 INTRODUCTION

NOW-a-days microwave resonators have become very important subject of interest. Recent years have observed the demand for reconfigurable antennas, these are used in a variety of applications, including sensors, filters, frequency meters and tuned amplifier etc [1]. These are commonly used in many commercial applications in the industry, such as mobile satellite communications, direct broadcast satellite services etc. The first wearable active receiving textile antenna operating at 2.45 GHz is addressed for use in personal area networks[2]. Slotted antennas for WLAN applications become a research point in the past decades and many different technologies for miniaturized antenna have been proposed [3]-[6], slotted antennas for ISM band become a hot research point in the past decades and many technologies for miniaturized antenna have been proposed [7].

2 WEARABLE ANTENNA DESIGN

In this paper a new wearable antenna is used for BCWC operating at the frequency 2.45 GHz, as a P shape wearable antenna with micro strip line feed. A numerical study has been done, to find out the exact feed location and the feed location is found at (-44.59,1.85 ,0). Dimension of the patch has been calculated based on transmission line model [8]. The width and length of the patch has also been estimated [9]. The substrate duroid (tm) (dielectric constant 2.2) has been taken in this design. It is also very helpful to understand the interaction and performance of the antenna and the communication system for BCWC.

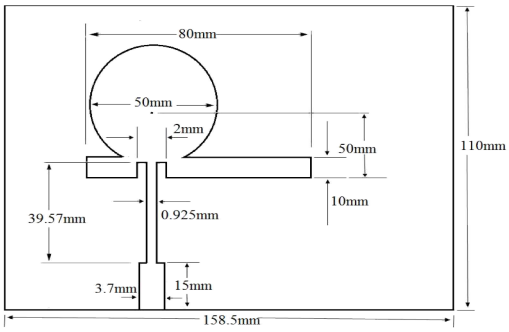

Figure 1: Geometry of the P-shaped micro strip patch antenna.

BCWC has been given a great attention in recent years due to the advances in wireless technology. Now the advent of textile antennas has opened doors for the emergence of body-worn antenna systems embedded in known as "smart clothes"[10]. Textile antenna is very suitable for on body

radio communication as it is flexible, comfortable to be integrated into clothing[11] and also offers a low cost and easy to manufacture.

3 SIMULATION ENVIRONMENT

This research focuses on the investigation of the effect of different substrates on the performance of a wearable antenna in terms of return loss characteristics. Simulation has been carried out by using Ansoft HFSS V13 simulating software. The performance of the wearable antenna is compared to a conventional duroid(tm) antenna at 2.45 GHz. Four types of nonconductive materials were selected i.e. glass, marble, polyethylene, rubber. The results may be happened due to these materials relative permittivity characteristics. The relative permittivity of duroid (tm), glass, marble, polyethylene, rubber is described below in TABLE 1.

TABLE 1
RELATIVE PERMITTIVITY OF DIFFERENT SUBSTRATE MATERIALS

Substrate Material	Relative Permittivity
Duroid(tm)	2.2
glass	5.5
marble	8.3
polyethylene	2.25
rubber	3

4 RESULTS AND ANALYSIS

TABLE 2summarizes the comparison of centre frequency between simulated wearable antenna using different substrates. From TABLE 3 and Figure-2 , it can be observed that some amount of downward frequency and upward frequency shift occurred with the utilization of different substrates. Rubber based antenna showed the worst upward frequency shifting where the downward shifting of polyethylene is larger than conventional antenna.

TABLE 2
CALCULATED CENTRE FREQUENCY OF DIFFERENT SUBSTRATE MATERIAL BASED ANTENNA

Substrate Material	Centre Frequency
Duroid(tm)	2.325
glass	2.55
marble	2.025
polyethylene	2.25
rubber	2.5

TABLE 3
CALCULATED RETURN LOSS OFDIFFERENT SUBSTRATE MATERIALBASED ANTENNA

Substrate Material	Return Loss
Duroid(tm)	-17.5
glass	-14
marble	-5.5
polyethylene	-19
rubber	-0.375

From Figure 2, it can be seen that there is a good agreement between poly-ethylene based antenna and conventional antenna. However, polyethylene based antenna produced higher return loss than conventional antenna by 1.5 dB. The other three antenna using glass, marble, and rubber produced 3.5 dB, 12 dB and 17.125 dB lower than conventional antenna respectively. From TABLE 3the result exhibited that polyethylene based textile antenna produced greater return loss -19 dB. Other three substrates based antennas produced -14 dB, -5.5 dB, -0.375 dB return loss respectively. These results may be happened due to these materials relative permittivity characteristics.

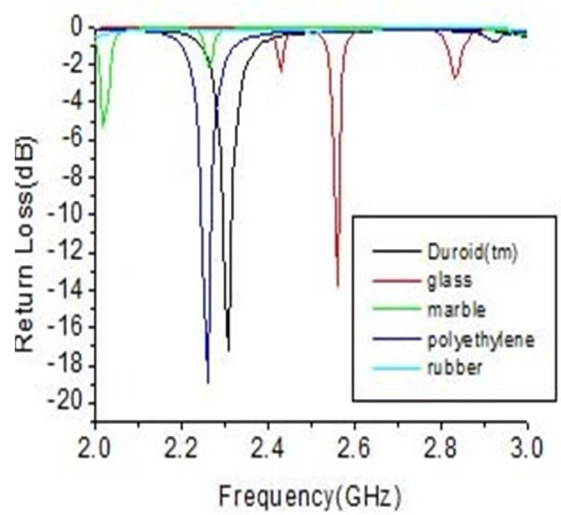

Figure 2: Simulated return loss for different substrate materials based antenna

5 CONCLUSION

The investigation of the effect utilizing four different substrate materials for P shaped wearable antenna is presented in this paper. The return loss characteristics of all five types substrates P shape wearable antennas were studied. The result exhibited that all four substrates (glass, marble, polyethylene and rubber) based P shape wearable antenna are compared to a duroid(tm) based P shaped

wearable antenna. The polyethylene based wearable antenna produced higher return loss compared to other substrates based antenna.

ACKNOWLEDGEMENT

The authors like to acknowledge Dr. B. C. Roy Engineering College, Durgapur, India and Bengal Engineering and Science University (BESU), Shibpur, India for providing necessary support during this research work.

REFERENCES

[1] Pozar, D. M., Microwave Engineering, Addison-Wesley, New-York, 1990.

[2] Frederick Declercq and Hendrik Rogier. 2010. Active Integrated Wearable Textile Antenna with Optimized Noise Characteristics. I IEEE Transaction on antenna and propagation. 58(9): 3050-3054.

[3] Ang, B. K. and B. K. Chung, "A wideband E-shaped micro strip patch antenna for 5–6 GHz wireless communications," Progress In Electro magnetics Research, PIER 75, 397–407, 2007.

[4] Chandan Kumar Ghosh, Biswarup Rana, Susanta Kumar Parui "Design and development of E-shaped array antenna using Defected Ground Structure at 5.25 GHz band" Progress in 2nd Annual International Conference IEMCON 2012.

[5] Ge, Y., K. P. Esselle, and T. S. Bird, "E-shaped patch antennas for high-speed wireless networks," IEEE Trans. Antennas Propagat., Vol. 52, No. 12, 3213–3219, Dec. 2004.

[6] T. A. Denidni and N. Hassaine , "Broadband and high-gain E-shaped micro strip antennas for high-speed wireless networks" Progress In Electromagnetics Research C, Vol. 1, 105–111,2008.

[7] Ahmed Al-Shaheen" New Patch Antenna for ISM band at 2.54 GHz" Progress in ARPN Journal of Engineering and Applied Sciences, VOL. 7, NO. 1, JANUARY 2012

[8] W.L.Stutzman. Antenna Theory & Design. John Willy & son's ine Second edition 1998.

[9] R.A. Sainati CAD of micro strip antenna for wireless applications. Artech House, Inc.1996

[10] J. Lilja, P. Salonen and P. de Maagt, "Characterization for conductive textile materials for software antennas," 2009 Antennas and Propagations Society International Symp., June 2009, pp. 1-4.

[11] I. Locher, M. Klemm, T. Kirstein and G. Troster, "Design and characterization of purely textile patch antennas," IEEE Trans. On Advanced Packaging, vol. 29, no. 4, June 2006, pp. 777-788.

Rajasree Hazra received her B.Tech degree in Electronics and Communication Engineering in the year 2011from West Bengal University of Technology, India. She is now doing M.Tech. degree in Electronics and Communication Engineering from West Bengal University of Technology, India. Her current research interests include the micro strip antennas, wearable antennas, Body centric wireless communication, DGS.

Chandan Kumar Ghosh received the B.Sc (Hons) degree in Physics and B.Tech. degree in Radio physics and Electronics from University of Calcutta in the year 1987 and 1990 respectively. He did M. Tech. degree in Microwave Engineering in the year 2003, from Burdwan University, India. From 1991 to 1995, he worked as Development Engineer in Sonodyne Electronics Co. Pvt. Ltd. and from 1996 to 1999 he worked as Assistant Manager (R&D) in Sur Iron & Steel Co. Pvt. Ltd. From 2000 to 2009 he was associated with the department of Electronics & communication Engineering of Murshidabad College of Engineering & Technology and from Aug'10 he is in Dr. B. C. Roy Engineering College, Durgapur, India and presently holds the post of HOD in Electronics and Communication Engineering Dept. He published more than 30 contributory papers in referred journals and international conference proceedings. His current research interests include the Array antenna, MIMO antenna, DGS, EBG etc.

Susanta Kumar Parui received the B. Sc degree in Physics and B. Tech. degree in Radio physics and Electronics from University of Calcutta in the year 1987 and 1990 respectively. He did Master degree and Ph. D in Microwave Engineering from Bengal Engineering and Science University, Shibpur, India. From 1993 to 2000, he worked as Instrument Engineer in Process control Industries. Since 2000, he is associated with the Department of Electronics and Telecommunication Engineering of Bengal Engineering and Science University, India and presently holds the post of Assistant Professor. He was awarded post doctorial fellowship from Royal Academy of Engineering, U.K in the year 2009. His current research interests include the planar circuits, antennas, SIW, DGS, EBG and Meta materials. He published more than 40 contributory papers in referred journals and international conference proceedings.